2SPBL10 Architectural Solar LED Light

The 2SPBL10 solar bollard light is an architectural independent lighting solution ideally for various applications such as parks, pathways, bike lanes, remote areas, golf courses, beach resorts, marinas, residential areas and landscape lighting projects.

The architectural patented design in combination with a robust high LED lighting output in a high-grade construction makes it your ideal choice for all your self-contained lighting projects.

2SPBL10 works completely without wiring and gets its power from the sun, using a special energy storage system, which requires no replacement of batteries for several years.

Energy storage and usage is controlled by a unique built-in self-decisive software algorithm. Cloudy days or shaded areas, the intelligent energy saving 2SBL10 always provides perfect lighting conditions.

Uses and Applications Guide

Residential areas	●
Parks	●
Boardwalks	●
Resorts	●
Marinas	●
Gardens	●
Landscaping	●
Walking paths	●
Bike paths	●
Golf courses	●

Technical Specifications

Solar Power	3.5W
Battery Capacity	6.4V/5Ah
Battery Type	LifePO4 Battery, more then 2000 cycles
Power of Lamp	1.8W (235lm-255lm)
Pole Height (Light Included)	31.49in
Rainy/Cloudy Days	Depends on solar radiation
Working Temperature	-4°F- 131°F
Operation Mode	30% dim, when motion sensor trigger 100% to 30 sec.
Lighting Technology	Chip LED, Beam angle 120°
Life span	50.000 Hours
CCT	3,000K – 6,000K
Solar Module	Monocrystalline solar panel
IP Rating	IP65
Body Material	Anodized aluminum alloy

ORDERING GUIDE

Example: 2SBPL10 – 30K- 0- GR

Series	LED Color	Dimming	Finish	Height
2SPBL10	30K 3000K 40K 4000K 50K 5000K 60K 6000K	0 – No Sensor 1 - Sensor	GR - Grey BLK - Black	31.49 in

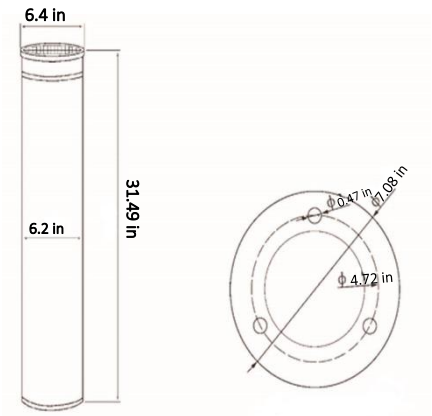

Legal Clarification: All technical information and/or products listings and/or technical support, and/or any kind of graphics, illustrations and/or instructions and/or the names, trade names, trademarks, trade symbols, service marks, logos, icons and trade dress of SolarPath Inc or in connection to SolarPath Inc or any of its selling products, contained herein is in the exclusive ownership of SolarPath Inc and may not be alternated and/or used in any manner including but not limited to copy of some or all of the said material by users and/or viewers or any third party for that matter of this document and the website to which it is linked without the express prior written permission of SolarPath Inc.
Furthermore, redistribution or any kind of commercial use or alternation or any kind of use other then downloading presented information in some or all contents of downloadable documents, and/or downloadable contents, is strictly prohibited without express written prior permission. All information set out herein is subject to changes as may occur from time to time. SolarPath Inc is not responsible for, and cannot guarantee and shall not be held liable for any information or the accuracy of such in websites that it does not manage